11084 A4 88781 Whirlpool29/1/04 29/1/04 2:59 pm Page 1

Instructions for use
使 用 說 明 書

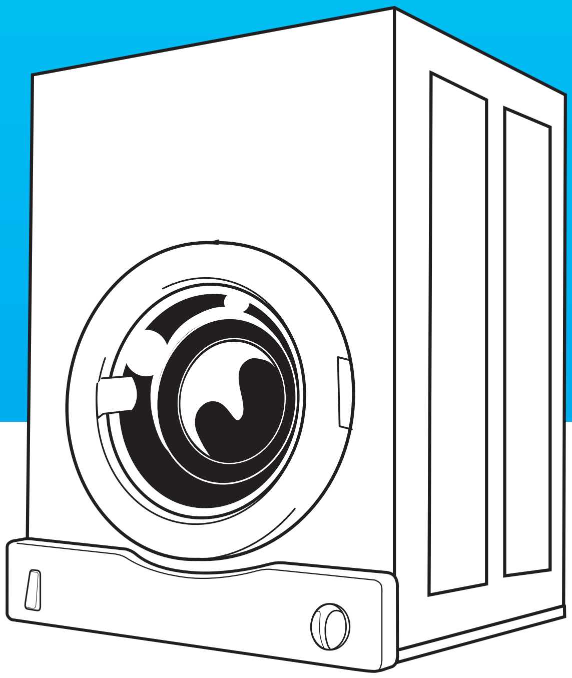

Whirlpool

TUMBLE DRYER 乾衣機 AWG 367

English

Packaging

To safeguard the environment take recyclable packaging materials to the nearest collection point.

WARNING

Before using your appliance please read the instructions carefully. They contain important advice about the use, installation and care of your appliance.

Please keep this booklet in a safe place for future users.

The manufacturer cannot be held responsible for any injury or damage to persons, animals or property if the following advice has not been observed.

1. After unpacking, please make sure that the appliance is undamaged. In case of doubt, do not use the appliance but call for a qualified technician or your retailer.

Packaging material (plastic bags, polystyrene parts, nails, etc.) must be kept out of the reach of children as it constitutes a potential risk, e.g. of suffocation by plastic bags, etc.

2. Only use the appliance for domestic use and for its intended purpose, that is drying thoroughly washed and rinsed laundry.

3. Installation must be carried out by a qualified technician, following the manufacturer's instructions.

4. **Before connecting the appliance, please make sure that the data shown on the rating plate correspond to those of your home. Electrical safety is ensured only if the appliance is correctly earthed as prescribed by safety standards for electrical installations.**

It is imperative that this fundamental safety requirement be checked. In case of doubt, careful inspection of the house wiring must be carried out by a qualified electrician.

5. Please check that the section of the socket wires can withstand the power absorbed by the appliance, which is stated on the rating plate.

In case of doubt, please contact a qualified technician.

6. **If the plug and the wall socket do not comply, have the socket replaced by a qualified electrician.**

The dryer must be connected to its own socket.

Do not use a two-way adaptor.

7. Before any cleaning or maintenance operation, disconnect the appliance from the mains by switching off the electricity at the mains or by pulling out the plug.

8. Do not leave the appliance switched on unnecessarily. Switch off at the main switch. For any repair, call in a specialist or our customer service through one of our Service Centres and ask for original spare parts.

9. Disconnect any disused appliance and render it unusable. Remove the door lock or render it inoperable to prevent children from being locked inside. Ensure that the appliance is disposed of properly and safely.

10. When using this appliance or any electrical appliance, you must follow these basic safety rules:

— do not touch or operate the appliance with wet hands or when barefoot.
— do not pull the cable to unplug, but the plug itself.
— do not expose the appliance to the weather (rain, sun, etc.)
— do not allow the appliance to be operated by young children without surveillance.

11. Never tumble dry articles which have been dry-cleaned, washed, soaked or sprayed with wax, dye, petrol or other inflammable liquids. The vapour may cause fire or explosion.

Always wash any articles which contain these materials first of all by hand and then allow to dry naturally in the open air.

12. Do not use any solvents eg. turpentine, white spirits in the appliance.

13. In order to ensure rigidity, built-under and integrated models may only be installed under a continuous worktop which is screwed to adjacent units.

14. Do not stand on the porthole door.

15. Do not reach inside the drum while it is rotating.

Technical Data

Overall dimensions:	Height 67 cm
	Width 50 cm
	Depth 47 cm
Voltage	220 - 240V - 50 Hz
Fuse	13 A
Max Load	1600 W
Maximum dry weight	3.0 kg. cotton, linen.

This product is manufactured to comply with the radio interference requirements of the council directive 87/308/EEC. It is intended for domestic use and not for commercial applications such as hairdressers.

Identification plate

The machine is equipped with a rating plate with all the technical data of the appliance and with a self-adhesive plate with the model and the serial numbers.

Electrical installation

WARNING: THIS APPLIANCE MUST BE EARTHED.

The mains lead of this appliance is fitted with a BS 1363A 13 amp fused plug. To change a fuse in this type of plug use an A.S.T.A. approved fuse to BS 1362 type.

1. Remove the fuse cover (A) and fuse (B) **Fig. 1.**
2. Fit replacement 13A fuse into fuse cover
3. Refit both into plug.

IMPORTANT: The fuse cover must be refitted when changing a fuse and if the fuse cover is lost the plug must not be used until a correct replacement is fitted.

Correct replacements are identified by the colour insert or the colour embossed in words on the base of the plug.

Replacement fuse covers are available from most electrical retail shops.

If the fitted plug is not suitable for your socket outlet, then it should be cut off and disposed of in order to avoid a possible shock hazard should it be inserted into a 13A socket elsewhere. A suitable alternative plug should then be fitted to the cable.

HOW TO CONNECT AN ALTERNATIVE PLUG. Fig. 2.

The wires in this mains lead are coloured in accordance with the following code:—

BLUE — "NEUTRAL" ("N")
BROWN — "LIVE" ("L")
GREEN AND YELLOW — "EARTH" ("E")

1 The GREEN AND YELLOW wire must be connected to the terminal in the plug which is marked with the letter "E" or by the Earth symbol ⏚ or coloured green or green and yellow.

2 The BLUE wire must be connected to the terminal which is marked with the letter "N" or coloured black.

3 The BROWN wire must be connected to the terminal which is marked with the letter "L" or coloured red.

INSTALLATION / ACCESSORIES

This tumble dryer is designed to be wall mounted above a floor standing appliance e.g. clothes washing machine.

A range of accessories are available to achieve an ideal installation.

They are:-

Venting hose AWF790 - to plug into the dryers exhaust and lead the moisture laden warm air to an open window.

All accessories are supplied complete with installation instructions.

Please position your dryer such that the air inlets on either side of the dryer are not obstructed and do not allow fluff to accumulate around your dryer.

Room temperature range 5°C to 30°C. Max. 70% R.H.

THE CONTROLS (Fig.3)

1 is the automatic sensing on/off button.

2 is the high/low heat selection button. Select low heat when drying synthetics and delicate fabrics.
Select high heat when drying cottons.

3 is the automatic sensing/timed drying control knob.

Turn the knob CLOCKWISE to the recommended settings:-

A For automatic sensing drying of cottons/polyester/cotton.
B For automatic sensing drying of delicates.
0-90 mins. for timed drying.

Note: There is an automatic cool down period at the end of all programmes to minimise creasing.

Shoe Rack

The shoe rack is intended for stationary drying of machine washable cotton athletic training shoes.
It can also be used for other delicate articles e.g. hats

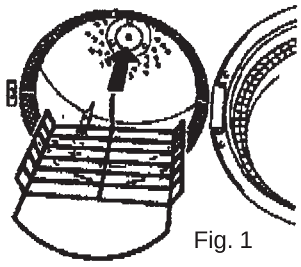

Fig. 1

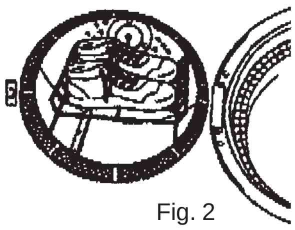

Fig. 2

Installation

1, Locate the centre rib wire into the hole in the plastic hub at the back of the drum. (Fig. 1)

2, Ensure the front (curved part) of the rack locates correctly between the filter and drum front. (Fig. 2)

OPERATION PROCEDURE

Before using the dryer for the first time, wipe the drum and door with a damp cloth to remove any dust.

1	**A.** Sort the clothes into groups of similar fabrics. **B.** Check all fastenings are closed and pockets empty. **C.** Roll dripping wet clothes in a towel to remove excess water. **D.** Turn sweaters inside out.
2	**A.** Open the door. **B.** Load clothes loosely into the drum, load sheets first, starting with one corner. **C.** Remember it is best to dry small and large articles together.
3	**A.** Close the door. **B.** Dry your hands. **C.** Check that the control knob is in the "O" position. **D.** Plug in the machine.
4	**A.** Set the sensing and heat selection buttons as required. **B.** Turn the control knob CLOCKWISE to the required position. The drum will start to rotate, stopping to reverse briefly every 12 minutes until the control knob reaches the "O" position. There is an automatic cool down period at the end of all programmes.
5	**A.** To stop the machine in the middle of a programme simply open the door and the drum will stop moving. To restart close the door. **B.** We recommend you to stop your dryer and redistribute large items such as sheets several times during the programme.
6	**A.** After removing the dried clothes always clean the filter. Wipe away any fluff and lint caught on the filter mesh (Fig. 4). Remove any threads by hand or with a soft brush. Keeping the filter clean will ensure efficient drying and save energy. **B.** Disconnect the dryer from the electricity supply.

FABRIC CARE

If in any doubt about the type of fabric from which the garment is made, check the care label inside the garment.

The vast majority of textile articles can be safely tumble dried, however we do not recommend you tumble dry woollen or wool mixture articles unless the article is labelled as being suitable.

CARE LABELS YOU MAY FIND ON YOUR FABRICS

◻	Suitable for tumble drying
⊡ (two dots)	Tumble dry using full heat
⊡ (one dot)	Tumble dry using half heat
⊠	Do not tumble dry

TIPS

- To reduce static electricity in fabrics use a fabric conditioner during the final rinse of your washing.
- Dry delicate articles e.g. tights in a pillow case.
- Take synthetics out of the dryer as soon as the programme has finished to prevent creasing.

POINTS TO REMEMBER

Do

Sort the clothes into groups of different fabrics.

Check that all fastenings are closed and pockets are empty.

Turn sweaters inside out.

Dry large and small articles in the same load if possible.

Clean the filter after every load.

Don't

Overload the dryer.

Place dripping wet articles in the dryer.

Dry articles that have been treated with a dry cleaning fluid.

Dry articles containing foam rubber or rubberlike materials in the dryer.

Dry large articles alone as they tend to roll up and so increase drying time.

ANY PROBLEMS

If the clothes are not dry after the normal drying time:

— Check that the filter is clean.

— Check that you have used the correct heat setting.

— Check that the vent outlet is not obstructed.

— Check that you have set the control knob to the correct setting.

— Check that the heater cut-out has not operated. Simply press the red disc **A** (Fig. 5) on the side of the fan housing. If it has operated then a sharp "click" will be heard as you reset it. This cut-out only operates if the airflow is severely restricted so make sure the filter is clean and that all other restrictions are removed before re-starting.

If your machine does not work, check the following points before calling a service engineer:

— Check that there is a supply of electricity.

— Check that the machine is switched on and the door is properly closed.

— Check the plug connections and fuse if applicable.

包裝

請將包裝箱內可循環再用的物料拿到就近的回收中心。

注意事項

使用本乾衣機前，請仔細閱讀使用手冊。本手冊內詳細列明了重要的使用指示、安裝及保養方法。

請妥善保存本手冊，以備日後使用。

倘因疏忽下列事項而導致任何人仕或動物受傷，或招致財產損失，製造商概不負責。

1. 拆箱後，請檢查乾衣機是否完好無損。如有任何問題，則切勿使用，應找合格的電器技師檢查或與經銷商聯絡。

   不要讓小孩碰觸任何包裝物料（包括膠袋、聚苯乙烯部分、鐵釘等等），該等物料均可能具有潛在危險，例如膠袋可能會導致窒息死亡等。

2. 乾衣機只限於家居使用，並只供烘乾徹底清洗及過水後的衣物。

3. 乾衣機必須由合格的電器技師安裝，並須遵照製造商的指示安裝及裝嵌。

4. **接駁電源前，請先檢查乾衣機的電源規格表，確定其與家裏的電源相符，方可接上插頭。乾衣機必須依照有關電器安裝標準，接上設有地線的插座，才屬安全。**

   倘有任何疑問，必須聯絡合格的電器技師，小心檢查家裏的電源裝置。

5. 請先檢查插座的電源能否負荷規格表上所載有關洗衣機耗電量。

   如有任何疑問，請聯絡合格的電器技師。

6. **假如插頭與插座並不配合，請僱用合格的電器技師加以更換。乾衣機必須接駁專用插座。**

   切勿使用雙向變流器。

7. 清潔機件或進行維修前，必須先切斷電源或拔掉插頭。

8. 如不使用乾衣機，應該切斷電源。需要維修時，必須由專業技師或由惠而浦客戶服務中心派員修理，並且使用由製造商出產的原廠後備零件。

9. 棄置舊乾衣機前，必須剪斷電線，使機器不能再用。機門的門鎖亦要除掉或撬毀，避免兒童被困鎖機內。必須將舊機棄置在適當的地方，以免發生危險。

10. 使用本乾衣機或任何電器時，必須遵守以下的基本安全守則：

- 手濕或赤足時，切勿觸摸或操作電器用品；
- 需要時，應直接拔出插頭，切勿拉扯電線；
- 乾衣機不可曝晒，亦不可讓雨水淋濕；
- 不要讓小童在無人看顧下操作乾衣機。

11. 切勿使用本乾衣機烘乾用石蠟、染料、汽油或其它易燃液體乾洗、浸染或噴灑過的衣物，否則上述物質所產生的蒸汽可能會導致火災或爆炸。沾有上述物品的衣物須用手洗，並在通風處自然風乾。

12. 不要在乾衣機內注入松節油、白醋劑等溶劑。

13. 為了固定乾衣機，必須用螺釘緊固好機架，然後再在機架下裝好相配的座地式電器。

14. 不要阻礙氣門。

15. 乾衣鼓轉動時，切勿伸手入內。

規格表

體積　：高 67 厘米　寬 50 厘米　深 47 厘米
電壓　：220 - 240V - 50Hz
保險絲　：13A
最大功率　：1600W
最高乾衣量：3 千克棉、麻質衣物。

本乾衣機符合歐洲共同體 87/308/EEC 有關無線電干擾之規定。本機僅限於家居作乾衣用途，不得作任何商業用途，例如理髮店等。

電源規格表

本乾衣機鑄有電源規格説明本機規格，而附貼的標籤則載有本機型號、序號。

電源接駁

警告：本機必須接駁至設有地線的插座。

電源插頭須為 BS 1363A 13amp。如須更換該插頭的保險絲，則須改用符合 A.S.T.A 標準並供 BS 1362 使用的型號。

1. 參照圖一拆除保險絲蓋（A）並取出保險絲（B）（見圖一）。
2. 換上 13A 保險絲。
3. 將保險絲管和保險絲蓋放回插頭內。

重要事項：更換保險絲後，必須蓋回保險絲蓋。如果不慎丟失，就必須換上合適的保險絲蓋，方可使用。

插頭底部的顏色或文字説明適用的保險絲蓋類別。

大多數電器零售店均有出售保險絲蓋。

如果插頭不配合，應該更換另一個合適的插頭，避免導致觸電。

怎樣接駁另一個插頭 （見圖二）

電線的顏色按以下規定區分

藍色 – 水線（N）
棕色 – 火線（L）
黃、綠相間 – 地線 （E）

1. 黃綠相間的電線須接上刻有“E”、附地線標誌 ⏚、綠色或黃綠相間的接頭。

2. 藍色線必須接上刻有“N”或黑色的接頭。

3. 棕色線必須接上刻有“L”或紅色的接頭。

安裝 / 配件

本滾筒式乾衣機須附牆裝在座地式電器上，例如洗衣機等。

要牢固安裝好乾衣機，惠而浦備有一系列配件，可供選用。

附件：

AWF 790 排氣管 ———— 可將濕熱空氣排出窗外。

所有配件連安裝手冊一併發售。

切勿阻塞乾衣機兩旁的進氣管，兩旁也不要堆積棉屑。

室溫應介乎 5℃ － 30℃ 之間，最高相對濕度為 70% 。

操作按鈕(見圖三)

1. 使用電子感應功能。只須將旋鈕擰至合適的衣物類別(請參閱下文)，便會自動按衣物的濕濡程度，精確計算乾衣所需的時間及溫度。
2. **高低溫選擇制。選擇低溫烘乾衣物，適合合成纖維或纖弱衣物；選擇高溫，適合棉紡衣物。**
3. 可選用電子感應功能或自行調校乾衣時間之控制旋鈕。

   順時針方向調校至理想的程序便可：

   A　電子感應烘乾棉質衣物。

   B　電子感應烘乾合成纖維 / 化學纖維衣物。

   　定時 0-90 分鐘烘乾衣物。

備註：

乾衣程序完成後便會進行冷卻，避免衣服起皺。

操作步驟	
	首次使用乾衣機前，應該先用一塊濕布拭抹乾衣鼓和機門上的塵埃。
1	A. 把衣物按質地分類。 B. 結好所有衣帶，取出口袋內的雜物。 C. 用毛巾扭出濕濡衣物多餘的水份。 D. 針織衣物要把裏面翻出來。
2	A. 打開機門。 B. 把衣物放入乾衣鼓，並且保持足夠空間。放入衣物時，應該先放下床單，並且先把其中一角放入。 C. 要緊記的是，最好能夠把大件和小件的衣物放在一起烘乾。
3	A. 關上機門。 B. 抹乾雙手。 C. 控制旋鈕應指向"O"位置。 D. 接通電源。
4	A. 調校感應和溫度選擇掣至適當位置。 B. 將控制旋鈕沿順時針方向調校至適當位置。 乾衣鼓開始轉動，並且每隔12分鐘便停下，再以相反方向轉動，直至控制旋鈕轉至"O"位置為止。 乾衣程序完成後，便會自動把衣物冷卻。
5	A. 要中止乾衣程序，只須打開機門便可。重新關上機門的話，就可以繼續乾衣程序。 B. 烘乾大件衣物如床單時，最好中途停機數次，重新把衣物擺放均勻。
6	A. 取出衣物後，必須清潔隔濾網，方法是把隔濾網的棉屑清除(見圖四)，並且用手或軟刷拭去線頭。 隔濾網保持清潔，能夠有效發揮乾衣功能，也可以節約用電。 B. 切斷電源。

護理衣物常識

如果你並不清楚衣物的質地，請檢查衣物內的標籤。

大部份衣物均適用於本乾衣機內，羊毛質地的衣物就不宜烘乾，除非衣物標籤上註明則當別論。

常見的標籤如下：

	適用於滾筒式乾衣機內
	可用高溫烘乾
	可用中等溫度烘乾
	不可烘乾

乾衣秘訣

－　為防止產生靜電，最後一次過水時應注入衣物柔順劑。

－　烘乾襪褲等纖幼衣物時，宜先把衣物放入洗衣袋內。

－　要避免合成纖維衣物起皺，就要待烘乾程序完成後，馬上取出衣物。

要達到理想的洗衣效果，請遵守下列指示

– 將衣物按質地分類。
– 結好所有衣帶，取出口袋內的雜物。
– 針織衣物要把裏面翻出來。
– 盡量在同一次乾衣過程中把大件和小件衣物一起烘乾。
– 每一次乾衣程序完畢後，都必須清潔隔濾網。
– 衣物切勿過量。
– 切勿把濕濡的衣物放入乾衣機內；
– 切勿用本機烘乾沾有乾衣劑的衣物；
– 切勿烘乾含塑膠泡沫或橡膠類質地的衣物；
– 切勿單獨烘乾大件衣物，否則便容易絞在一起，延長乾衣時間。

故障

正常乾衣時間過後，衣物仍未乾透：

– 檢查隔濾網是否清潔；
– 檢查有否選擇了合適的乾衣溫度；
– 檢查通風孔是否暢通無阻；
– 檢查控制旋鈕是否調校至正確位置；
– 檢查熱流中斷器有否運作。只須按下排氣扇旁的紅碟Ａ（見圖五），如果正在操作的話，那麼當你重置這只紅碟時，便會發出咔嚓聲。如果氣流受嚴重阻塞，熱流中斷器才會運作，因此必須清潔濾網，清除阻塞後，再重新開啟。

如果乾衣機不能正常運作，致電維修技師前先檢查下列事項。

– 檢查是否已接通電源；
– 檢查機器有否按下開關掣，並且正確關上機門；
– 檢查插頭及保險絲有無問題。

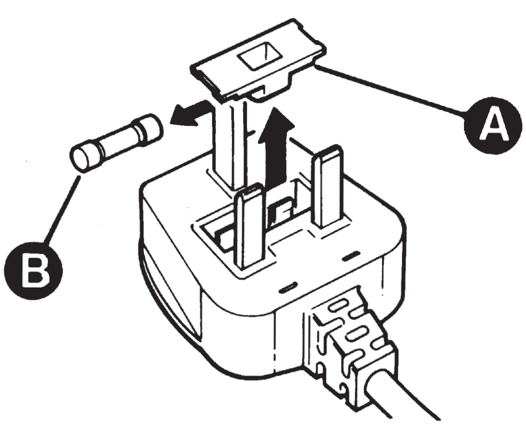

1.

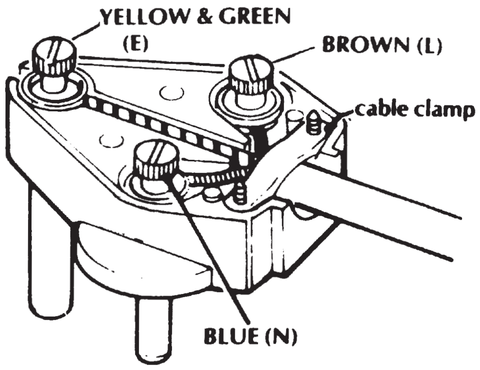

2.

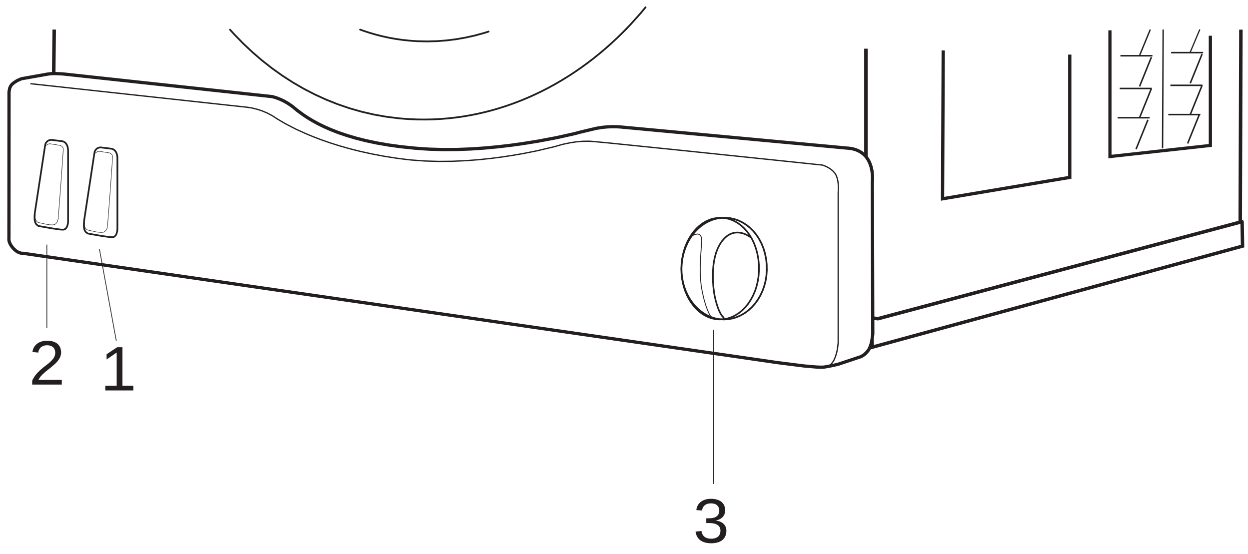

3

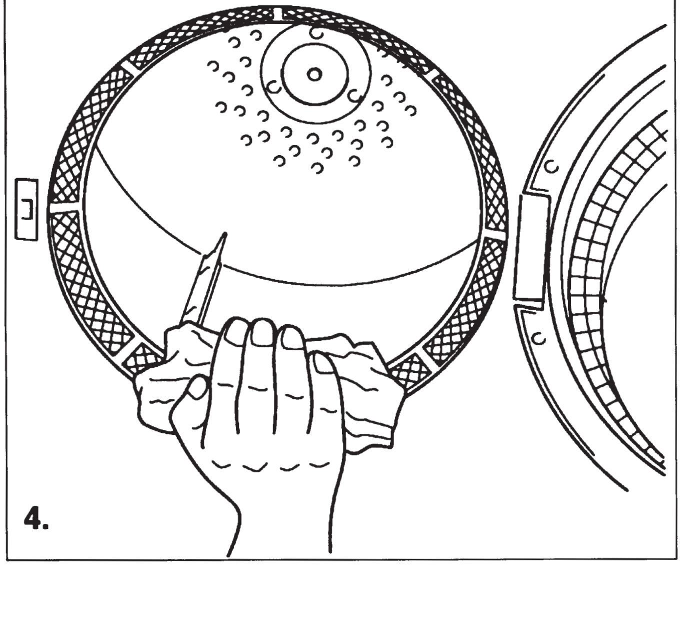

4.

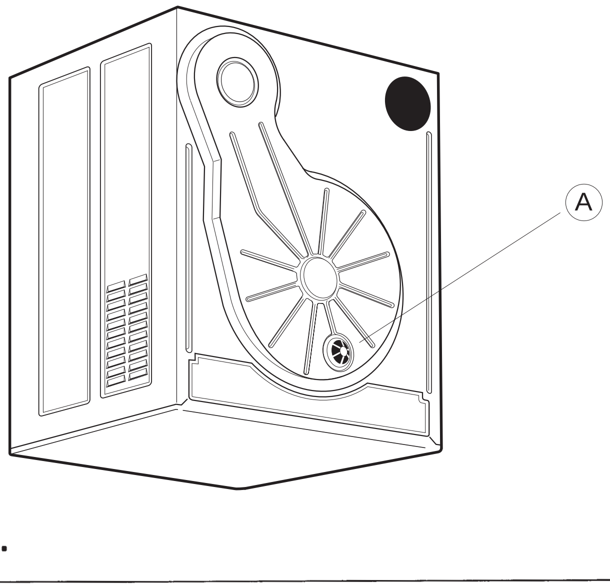
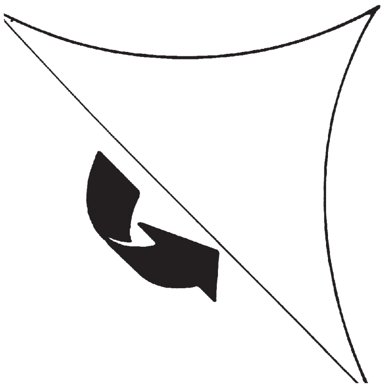
5.